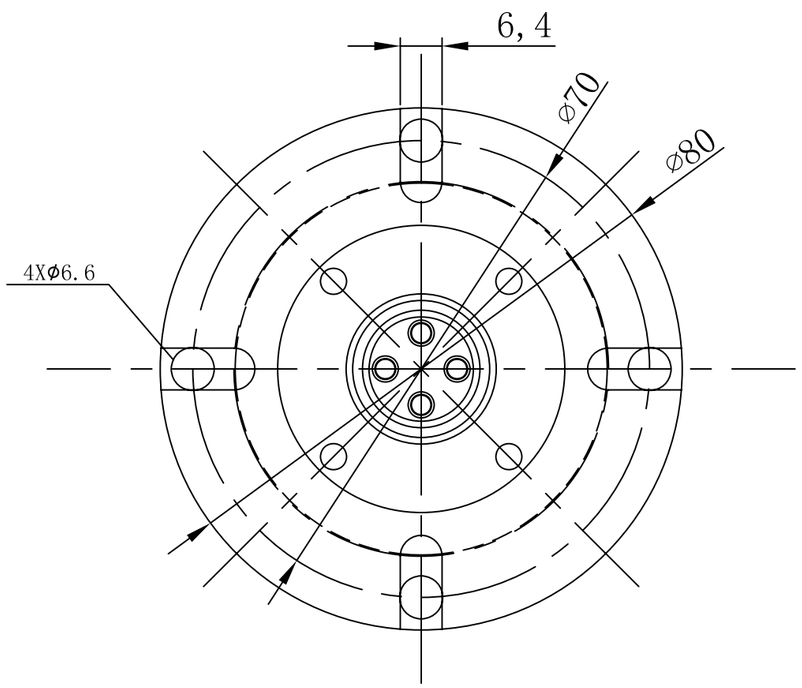
6, 4
⌀70
⌀80
4X⌀6. 6

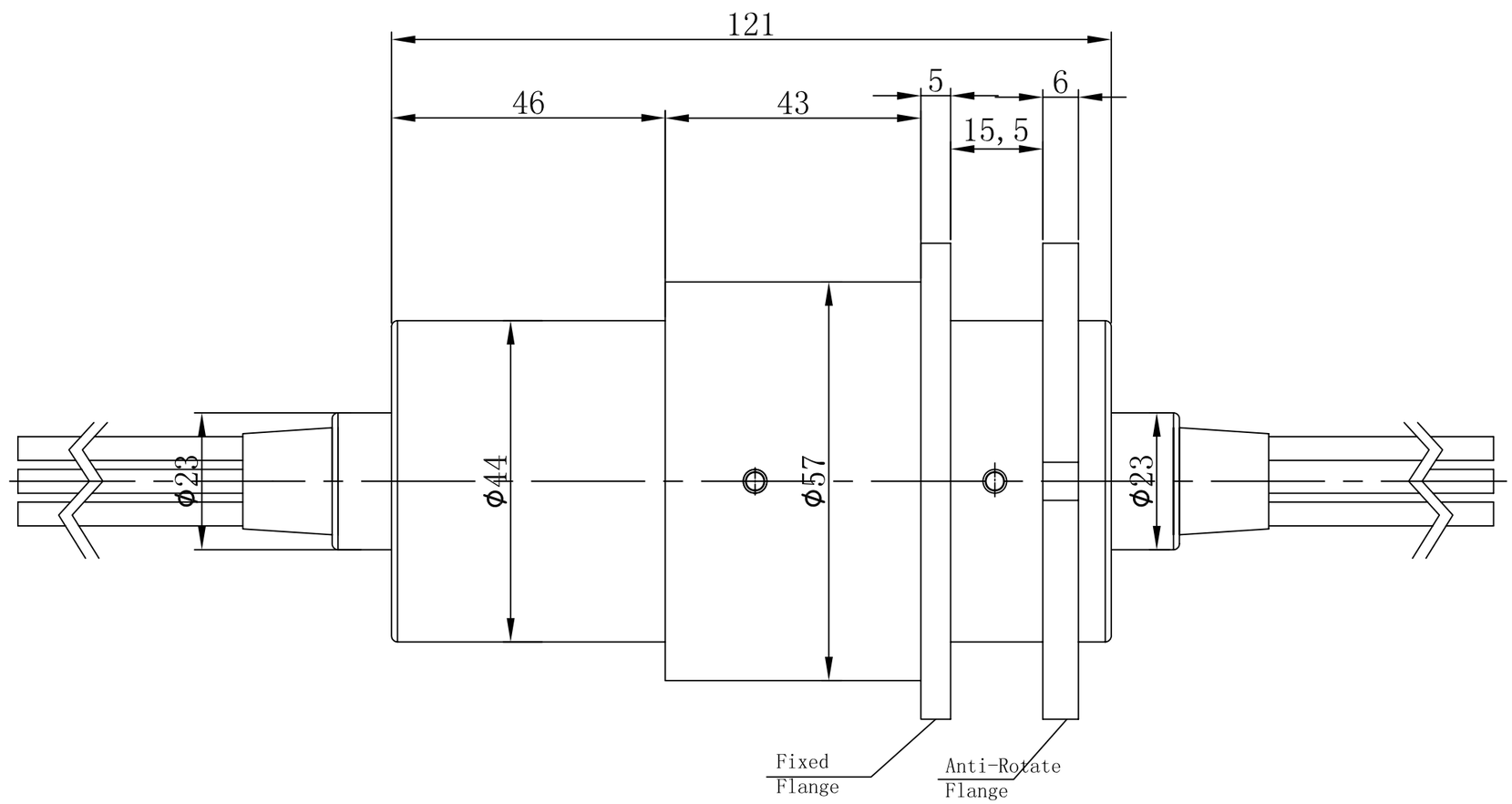
121
46
43
5
6
15, 5
⌀23
⌀44
⌀57
⌀23
Fixed
Flange
Anti-Rotate
Flange