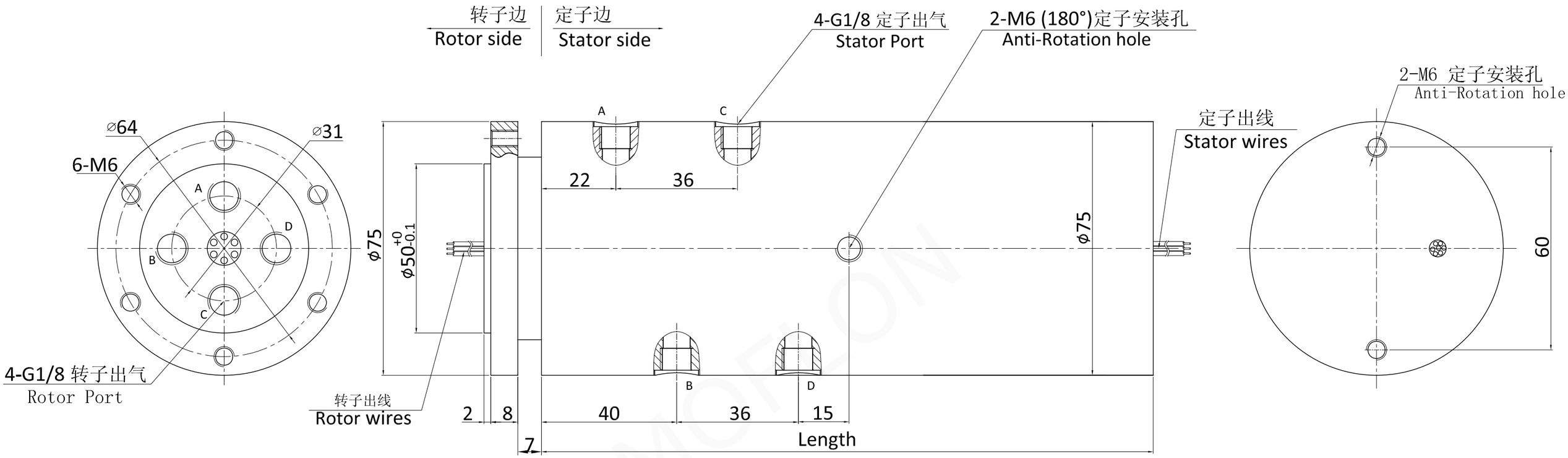

型号 Part#	气路数 Passages	接口尺寸 Connection Size	功率/信号 Power/Signal (Max 6A)	长度Length (mm)
MAPH400-02-S06	4	G1/8"	6路(rings)	181
MAPH400-02-S12	4	G1/8"	12路(rings)	197.8
MAPH400-02-S18	4	G1/8"	18路(rings)	214.6
MAPH400-02-S24	4	G1/8"	24路(rings)	231.4